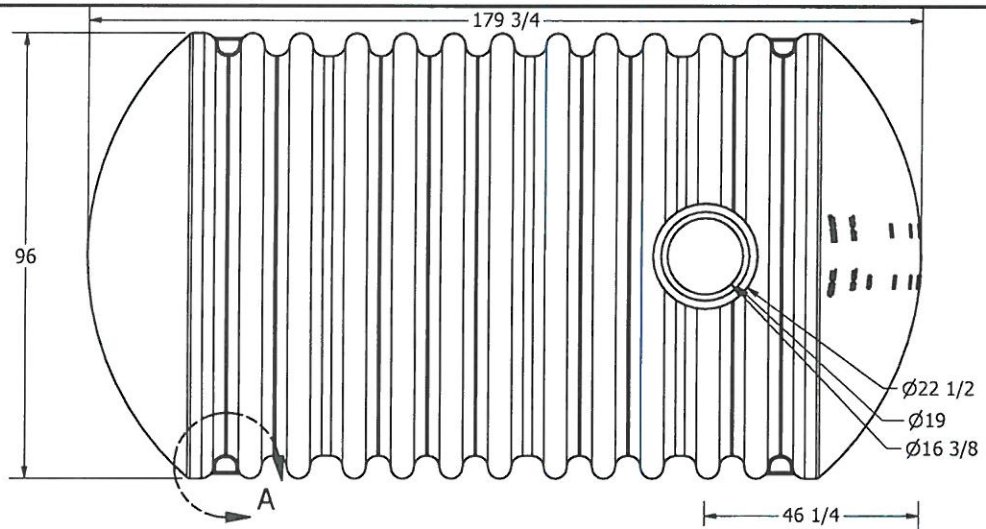


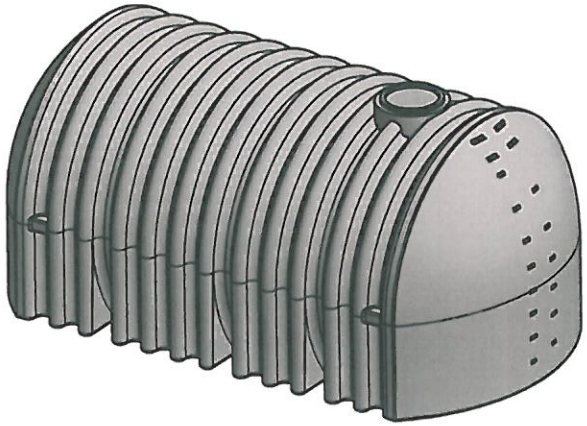

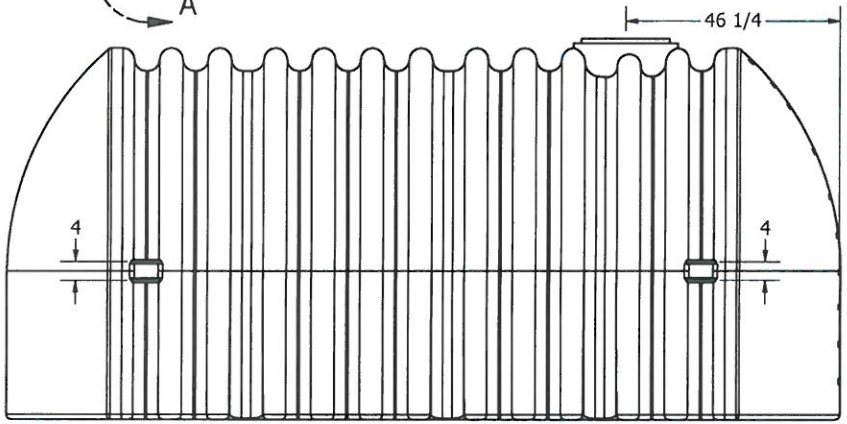


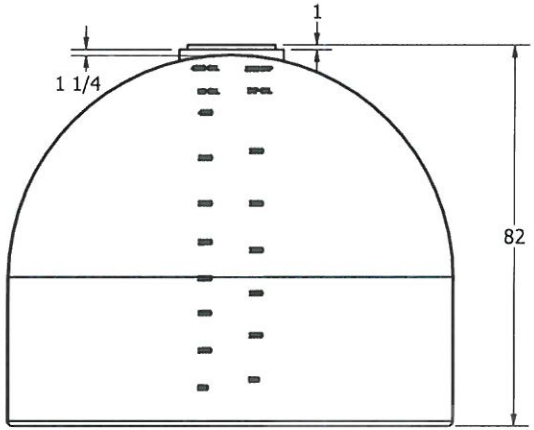


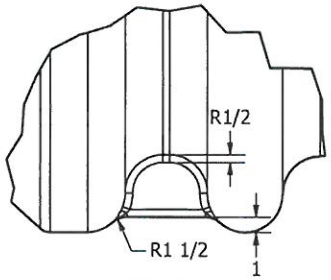


DETAIL A

| | | |
|---|---|---|
| DRAWN Liv Oltean | 10/10/2017 | |
| CHECKED | | TITLE 3500 IMP GAL FLAT BOTTOM TANK 45272 |
| QA | | |
| MFG | | |
| APPROVED | | SIZE B / DWG NO / REV |
| | | SCALE: 1/16 / SHEET 1 OF 1 |