REVISIONS				
ZONE	REV	DESCRIPTION	DATE	APPROVED
			Sept 1/11	Greg Kenny

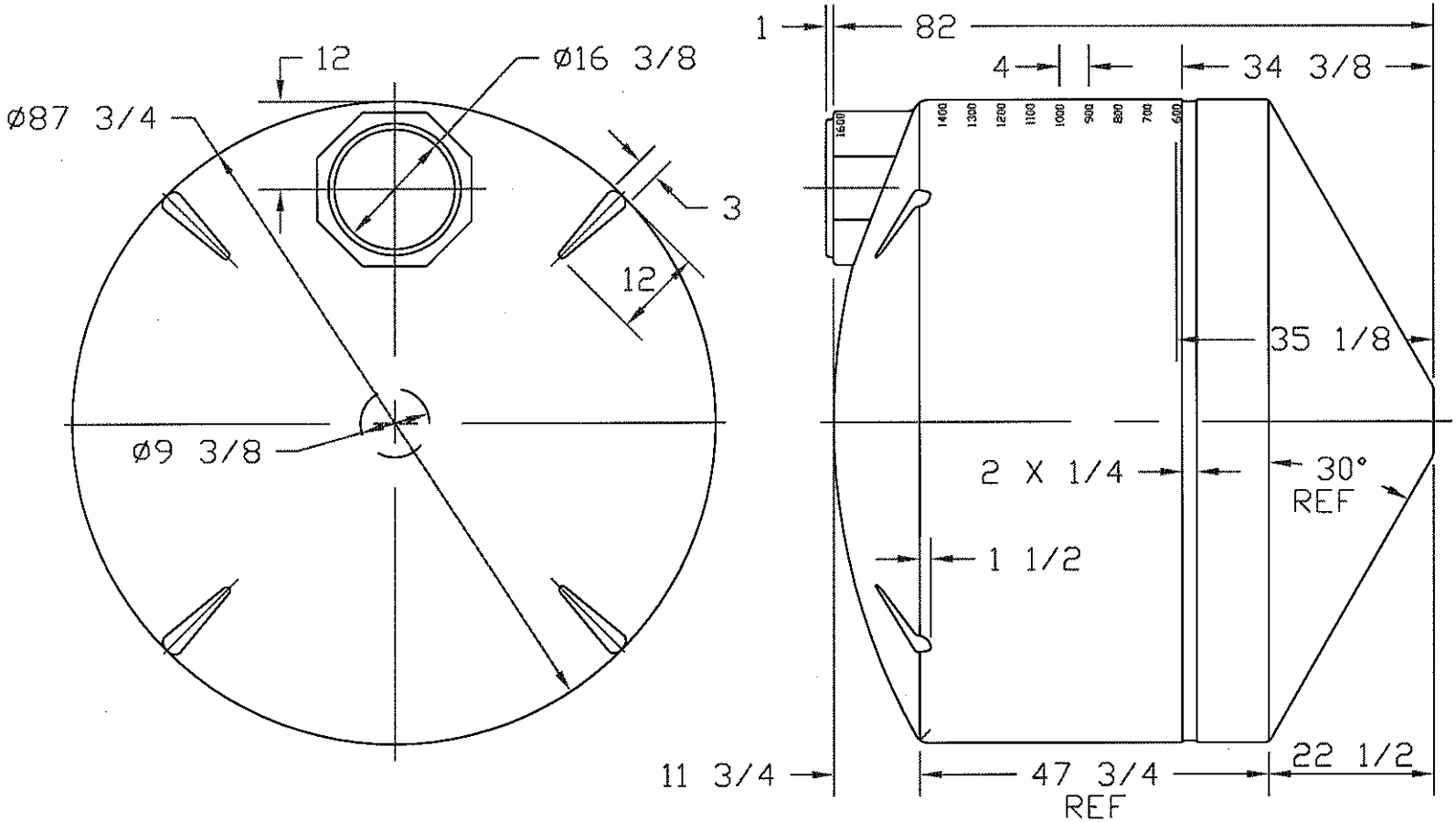

Image not to scale or identical t
tank. Representative picture only.

Part # 40817
Capacity: 1333 Imperial Gallons
Dimensions: 88" Diameter x 88" High

ZEEBEST PLASTICS
35 Calder Place, St. Albert, AB T8N 5A6
Ph: 780.447.5222 Fax: 780.455.9448
www.zeebest.com sales@zeebest.com