35 Calder Place, St. Albert, AB T8N 5A6
Ph: 780.447.5222 Fax: 780.455.9448
www.zeebest.com sales@zeebest.com

REVISIONS				
ZONE	REV	DESCRIPTION	DATE	APPROVED
			April 19/11	Greg Kenny

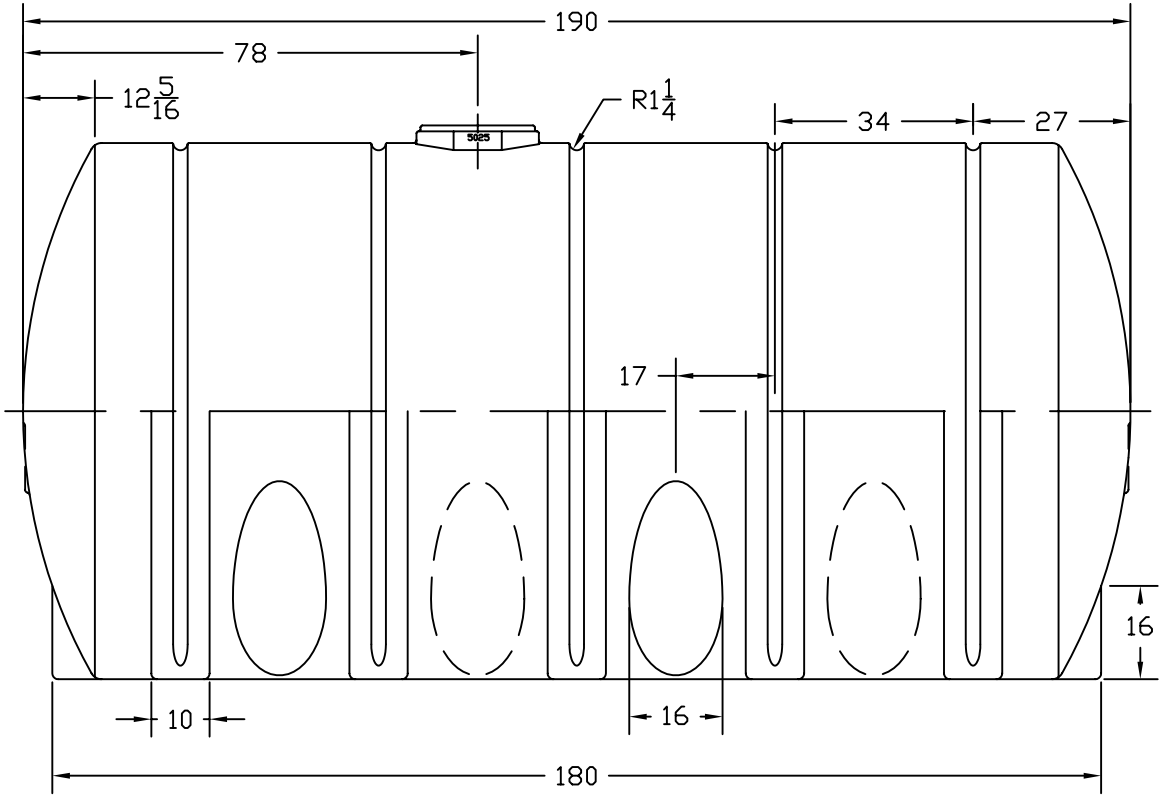

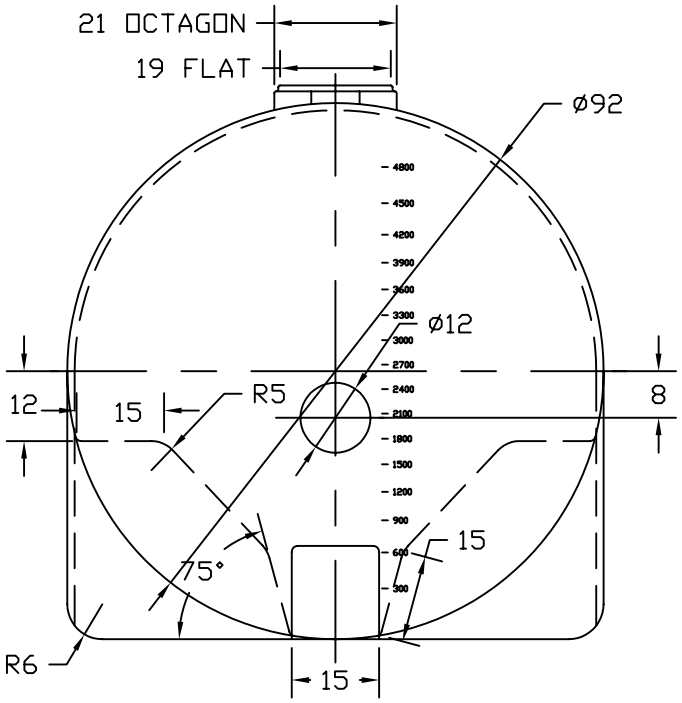

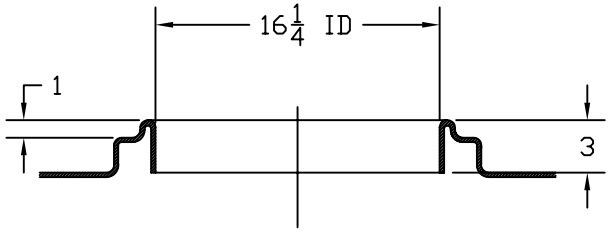

FILLWELL DETAIL - 1/8/ SCALE

Part # 41879

Capacity: 4190 Imperial Gallons

Dimensions: 92" Diameter x 190" Long